IRISH BOAT SHOP

January Focus:

ENGINES

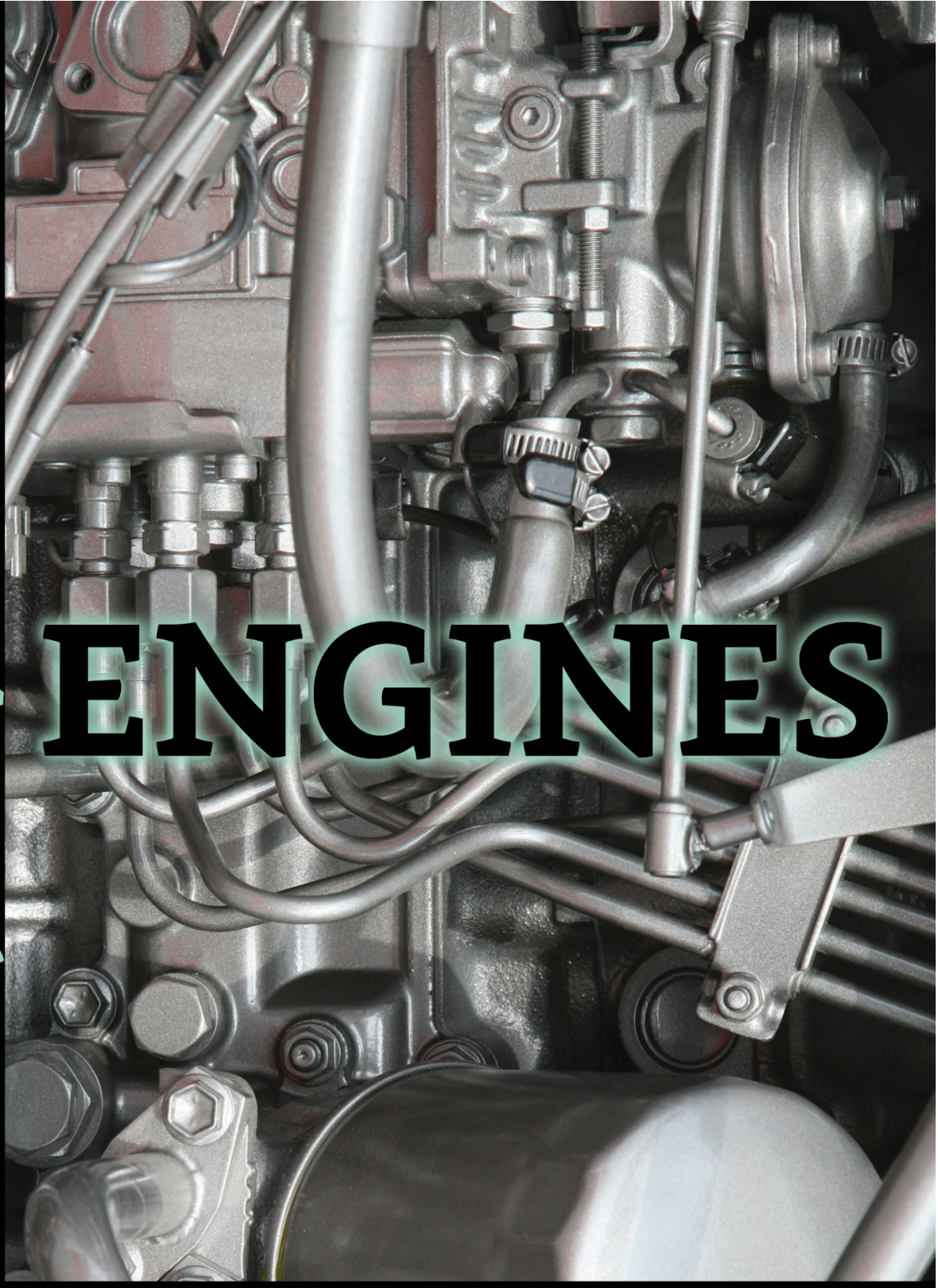

Ladies at the Helm

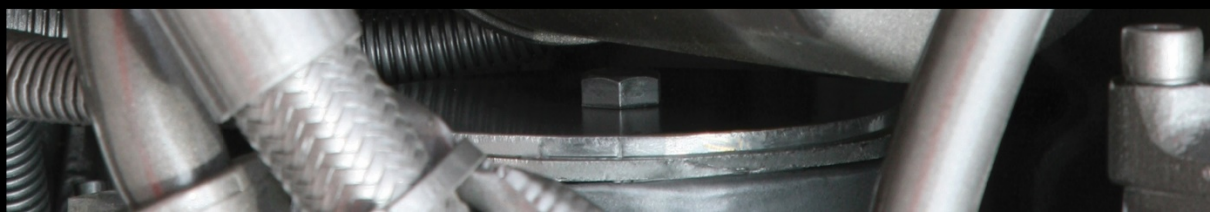

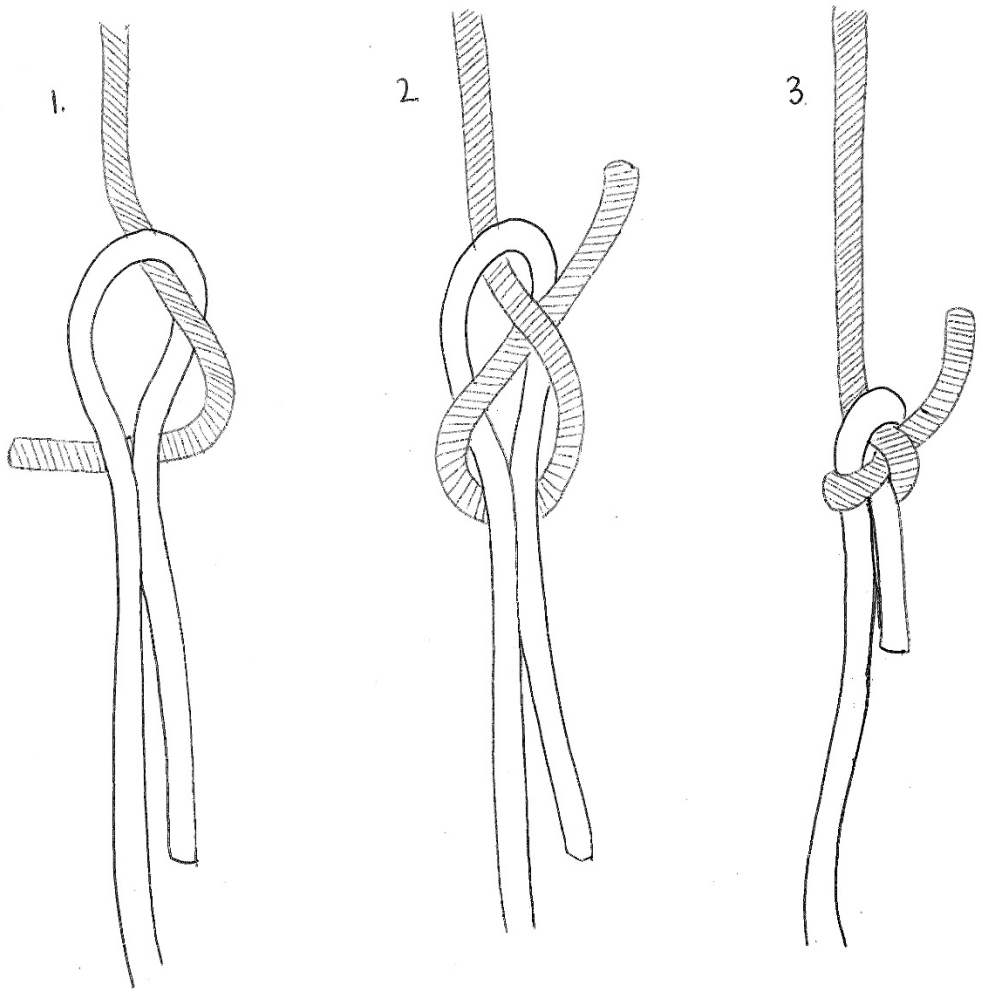

SHEET BEND

The **Sheet Bend** is an easy way to join two ropes. This normal Sheet Bend, which works best to join ropes of two different diameters. Another common name is the becket bend. In traditional rigging this is how you dead end a line to a block with a rope becket.

How To Tie

1. Make a loop in rope A (white rope). Tuck the working end of rope B (striped rope) through the loop from the back to the front and pass it underneath the working end and standing end of rope A.

2. Pass the working end of rope B over the loop and tuck it underneath the standing end of rope B.

3. Tighten the bend by pulling the standing end of rope B and the loop of rope A in opposite directions.

Outline

Types of Engines

Boat owners have an array of choices when it comes to picking an engine, otherwise known as a motor or drive. The basic mechanical principle of a boat engine is the same as for any internal combustion engine, such as those that power cars, trucks, or other vehicles. However, whereas a land vehicle moves forward when energy released by the combustion of fuel powers a set of wheels mounted on tires, boats move forward when the drive shaft turns a propeller.

Inboard Drives

The term drive is interchangeable with motor and engine, so an inboard drive is simply a marine engine enclosed inside the boat. With an inboard drive, the shaft, rudder, and props are located on the underside of the boat, leaving the transom clear.

Inboard drives can be powered either by gasoline or diesel fuel, and single or twin engines are available. A marine V-drive engine is a modified conventional inboard drive that is located closer to the stern of the boat than a conventional inboard drive.

Inboard motors can range from 1-cylinder to 12-cylinder models, but because many are derived from automobile engines, 4-cylinder or 6-cylinder engines are most common. Some inboard motors are air-cooled, while others use a water-cooling system—either a fresh-water radiator similar to that in an automobile or a water pump system that brings in lake or sea water to cool the engine.

Outboard Motors

Outboard motors are the most common type of boat propulsion, found on most freshwater fishing boats and many pleasure craft. They are self-contained engine units mounted to the rear wall, known as the transom, of the boat. Each unit has an engine, propeller, and steering control. In most units, cables attached to the steering wheel actually pivot the entire motor unit to provide steering. To make it easier to move the boat in and out of the water, the entire motor unit can be pivoted up and out of the water.

Two-cylinder and three-cylinder models are the most common, but very large outboard motors are also available, including V-6 and V-8 engines that rival the power available in inboard drive systems. Most motor types drive a rotating propeller, but some are jet-propulsion systems that move the craft by shooting water through the system.

Sterndrives (Inboard/Outboard)

Otherwise known as the inboard/outboard marine motor, sterndrives are thought by some to be the best of both worlds. The engine is mounted inboard forward of the transom, with a shaft that goes through the transom to the drive unit located outside the boat below the water.

Similar to the outboard lower unit, this portion of the engine has a propeller and acts as a rudder to steer the boat. Like an outboard, the lower drive unit on a sterndrive can be pivoted up to facilitate moving the boat in and out of the water.

Engine sizes are comparable to those in larger outboard motors: Four-cylinder and V-6 engines are common.

Surface Drives

Surface drives are specialized drives, mostly used by high-performance boats, with an inboard engine that drives a propeller that "pierces" the surface of the water to provide increased thrust. They operate half in and half out of the water in the planing wake of the boat, with a propeller shaft that exits almost horizontally through the transom. These drives are used when drivers want to achieve a high rate of speed. Racing boats, such as cigarette boats, use surface drive systems.

Jet Drives

Most often used in personal watercraft or very large boats, jet drives replace propellers to push a boat through the water using high-pressure air forced out of the stern of a vessel. The water jet draws water from beneath the hull and passes it through impellers and out a moveable nozzle that steers the boat. In smaller boats, jet drives have the advantage of very fast acceleration, but are quite loud and not very efficient when it comes to fuel economy. Jet skis use this kind of motor.

Pod Drives

A pod drive is a system in which the propeller units extend down directly beneath the engine through the bottom hull of the boat. The best known of these systems is the Volvo Penta Inboard Performance System (IPS), which became available for recreational boats in 2005.

In the Volvo IPS, the propellers are set in front of the drive shaft, so that the boat is actually pulled through the water, not pushed. This increases efficiency and speed by up to 20 percent. Other pod drive models push the boat in traditional fashion, with propellers mounted behind the drive shaft unit.

Pod drives are usually mounted in pairs, and this allows the boat to be extremely maneuverable. With the pods controlled individually, a boat can literally spin on its axis while remaining in place, a decided advantage for docking or boating in tight quarters.

Engine Preventative Care

Two Opposing Views – so find what's comfortable for your engine knowledge and comfort level

"While many boaters follow the 'When it breaks, I'll fix it' mentality, this is not a good idea and will surely reduce the reliability and efficiency of your outboard(s). According to Mike Lund of Outboard Specialties, approximately 50-percent of damaged motors that come through his shop are a result of lack of maintenance. Talk to distinguished mechanics around the state and they will likely sing you the same song. Regardless of the hours accumulated, annual service should never be neglected. Many boaters think that an annual service and 100-hour service are interchangeable terms, but this is far from the truth. Contact your manufacturer or local mechanic and see what service plan is best for you." – article from *Power & Motoryacht*

"No discussion of engine life would be complete without mentioning the topic of preventative maintenance—replacing or repairing things before they actually need it. This is a topic rife with controversy because the benefits that may accrue by replacing something that might go wrong can be offset by problems due to improper installation and disturbing that which would have been better left undisturbed. My own view is succinctly summarized by the aphorism, 'If it ain't broke, don't fix it.' Instead of whipping out the old tool kit, keep a sharp eye out for symptoms of trouble and take action when the problem makes itself apparent." – article from *Power & Motoryacht*

spring start-up checklist

The following are general guidelines. Check your owner's manual for manufacturer's recommendations or procedures specific to your boat.

FUEL SYSTEM

- ☐ Inspect hoses, connections and tank surfaces for leaks or damage
- ☐ Replace components as needed
- ☐ Verify all fittings and clamps are properly secured
- ☐ Ensure the engine, exhaust, and ventilation systems are functioning properly

BELTS, CABLES & HOSES

- ☐ Check for cracks and brittle areas
- ☐ Ensure belts fit tightly and are not worn
- ☐ Inspect the outer jacket of control cables for cracks or swells, which may indicate a problem

ELECTRICAL SYSTEM

- ☐ Inspect all electrical connections for cleanliness and tightness; corrosion may indicate an unsafe condition
- ☐ Remove terminals and clean with a wire bush; clean cable ends
- ☐ Change battery and ensure it can hold a charge
- ☐ Electrical systems should be inspected by a qualified technician regularly

FLUID LEVELS

- ☐ Check engine oil, power steering, power trim reservoirs and coolant levels
- ☐ Change engine oil, oil filter and drive lubricants if these tasks were not done prior to winterizing

PROPELLERS & HULLS

- ☐ Inspect propellers for dings, pitting, cracks and distortion
- ☐ Make sure propeller is secured properly; replace bearings if needed
- ☐ Check hull for blisters, distortions and cracks
- ☐ Clean the hull, deck and topsides
- ☐ Ensure the drain plug is securely in place prior to every launch

SAFETY GEAR

- ☐ Inspect life jackets to ensure they are in good condition; make sure there is one for each potential passenger
- ☐ Check that fire extinguishers are fully charged, properly stowed and are the correct class for your vessel
- ☐ Take advantage of any safety inspections offered by the U.S. Coast Guard (USCG), USCG Auxiliary or U.S. Power Squadron

discover BOATING.

semi-annual checklist

FIRE EXTINGUISHERS

- ☐ Do you have all required quantities and types of fire extinguishers?
- ☐ Have they been checked within the past year?
- ☐ Are serviceable units tagged by a licensed facility?
- ☐ Are units accessible?
- ☐ Is at least one accessible from the helm or cockpit?
- ☐ Are you and your crew familiar with their operation?

SAFETY EQUIPMENT

- ☐ Lifelines or rails in good condition
- ☐ Stanchions or pulpit securely mounted
- ☐ Hardware tight and sealed at deck
- ☐ Grab rails secure and free of corrosion or snags that may catch your hands
- ☐ Non-skid surfaces free from accumulated dirt or excess wear

FUEL SYSTEM

- ☐ Is the system properly grounded at the filter, tank, deck, pump, etc.?
- ☐ Is the fuel tank free from rust or contamination?
- ☐ No leaks from tank, hose or fittings
- ☐ Hoses U.S.C.G. approved and free of cracking or stiffness with adequate slack to account for vibration
- ☐ Is tank secured?
- ☐ Fuel shut-off valve on tank and at engine
- ☐ Engine compartment and engine clean and free of oily rags or flammable materials
- ☐ Blower switch at remote location
- ☐ Is your fuel system protected from siphoning?

GROUND TACKLE

- ☐ At least two anchors on board
- ☐ Anchor and rode adequate for your boat and bottom conditions
- ☐ Tackle properly secured
- ☐ Length of chain at anchor
- ☐ Thimble on rode and safety wired shackles
- ☐ Chafing gear at chocks for extended stays or storm conditions
- ☐ Anchor stowed for quick accessibility

STOVES

- ☐ Labeled and designated for marine use
- ☐ Properly ventilated to remove carbon-monoxide from cabin
- ☐ Retainers or rails for pots and pans while underway
- ☐ If built-in, properly insulated and free from combustible materials, CNG and LPG (propane)
- ☐ Stored in separate compartment from vessel's interior and engine room
- ☐ Tightly secured shut-off valve at tank
- ☐ Proper labeling and cautions in place at tank location
- ☐ Hoses, lines and fittings of approved and inspected type
- ☐ Compartment is ventilated overboard and below level of tank base

ELECTRICAL SYSTEM

- ☐ Wiring approved for marine applications
- ☐ Is system neatly bundled and secured?
- ☐ Protected against chafing and strain

semi-annual checklist

- ☐ Adequate flex between bulkhead and engine connections
- ☐ Clear of exhaust system and bilge
- ☐ System is protected by circuit breakers or fuses
- ☐ Grounds to Zincs if required
- ☐ Wire terminals and connections sealed to prevent corrosion

PERSONAL FLOTATION DEVICES (PFDS)

- ☐ In addition to your pre-departure inspection of PFDs check for wear or abrasion, weak or torn seams, secure straps and buckles. Some types of PFDs are equipped with inflation devices; check to be sure cartridges are secure and charged.

BILGE PUMPS

- ☐ Will pump(s) adequately remove water in emergency? Do you have a manual backup? Are bilges clean and free to circulate (clear limber holes)? Do you check bilges frequently and not rely on automatic pumps?

CORROSION PREVENTION

- ☐ Through-hulls, props, shafts, bearings, rudder fittings, and exposed fastenings free of destructive corrosion
- ☐ Zincs are adequate to provide protection
- ☐ Through-hulls are properly bonded
- ☐ Inspect the steering cables, engine control linkage and cables, engine mounts and gear case for corrosion
- ☐ These items are properly lubricated or painted to prevent undue corrosion

THROUGH-HULLS

- ☐ Strainers, intakes and exhaust or discharge fittings are free from restrictions such as barnacles, marine growth or debris
- ☐ Inspect sea valves for smooth operation
- ☐ Handles are attached to valves for quick closure
- ☐ Hoses are in good condition and free from cracking
- ☐ Double hose-clamps below the waterline
- ☐ Anti-siphon valve fitted to marine toilet
- ☐ Through-hull plugs are near fittings or attached to hose in case of emergency

BATTERIES

- ☐ Stored in non-corrosive, liquid tight, ventilated containers
- ☐ Non-conductive covers are fitted over posts
- ☐ Batteries are well secured

content provided by BoatSafe.com

discover BOATING.

WINTERIZING YOUR BOAT

The following are general guidelines. Check your owner's manual for manufacturer's recommendations/procedures particular to your boat.

INBOARD ENGINES

- ❒ Change oil & oil filter
- ❒ Flush engine with fresh water
- ❒ Circulate antifreeze through the manifold
- ❒ Change transmission fluid
- ❒ Remove spark plugs/spray "fogging oil" into each cylinder *(Gas engines ONLY)*
- ❒ Wipe down the engine

STERN DRIVE

- ❒ Inspect stern drive/remove any plant life or barnacles
- ❒ Drain gear case and check for excessive moisture in the oil
- ❒ Clean lower unit with soap & water
- ❒ For units with rubber boot: Check rubber boot for cracks or pinholes
- ❒ Grease all fittings
- ❒ Check fluid levels in hydraulic steering or lift pumps

OUTBOARD ENGINES

- ❒ Flush engine with water; drain completely
- ❒ Wash engine with soap & water
- ❒ Disconnect fuel hoses; run engine until it stops
- ❒ Ensure all fuel is drained from carburetor
- ❒ Lubricate cylinder walls & pistons with fogging oil
- ❒ Apply water-resistant grease to propeller shaft & threads
- ❒ Change gear oil in lower unit
- ❒ Lubricate engine exterior or polish with a good wax

BILGES

- ❒ Clean & dry
- ❒ Clean any oil spills with soap & hot water
- ❒ Once dry, spray with moisture-displacing lubricant
- ❒ Add a little antifreeze to prevent any water from freezing

FUEL

- ❒ Fill fuel tank
- ❒ Add fuel stabilizer
- ❒ Change fuel filter(s) & water separator(s)

FRESH WATER SYSTEM

- ❒ Drain fresh water tank & hot water heater
- ❒ Isolate hot water heater by connecting the in & out lines together
- ❒ Pump non-toxic antifreeze into the system & turn on all faucets/shower/wash-down areas until antifreeze starts running out
- ❒ Put non-toxic antifreeze in the water heater

HEAD

- ❒ Pump out holding tank; while pumping add fresh water to the bowl & flush several times
- ❒ Add manufacturer-recommended marine cleaner/deodorizer; let sit a few minutes, then add water and pump out again
- ❒ Add antifreeze & pump through hoses, holding tank, y-valve, macerator & discharge hose

INTERIOR

- ❒ Remove valuables, electronics, lines, PFDs, fire extinguishers, flares, fenders, etc.; clean, check and replace as necessary
- ❒ Open all drawers/lockers & clean
- ❒ Turn cushions on edge so air can circulate around them or store in a climate controlled area
- ❒ Install a dehumidifier or use an odor & moisture absorber to keep your boat dry & mildew free

OUT-OF-WATER STORAGE

- ❒ Pressure wash hull, clean barnacles off props & shafts, rudders, struts & trim tabs
- ❒ Clean all through-hulls & strainers
- ❒ Open seacocks to drain water
- ❒ Check hull for blisters; attend to any you find
- ❒ Wax hull
- ❒ Take batteries out of boat; put on trickle charger or charge them every 30–60 days

Content courtesy of ***BoatSafe.com***

Boat Engine Troubleshooting

Using your senses of hearing, touch, smell, and sight can alert you to an impending situation with your boat that may be about to ruin your day. Here's how to heed the warning.

Your Sense of Hearing

Ignoring Whining Now Could Make You Cry Later

Some problem noises are obvious. Some are not. Get into the habit of regularly listening to critical components such as the fresh- and raw-water pumps, alternator, transmission, injector pump (if you have a diesel), and any other convenient spots. You'll then have an idea of what's normal. You can use a long screwdriver with plastic handle to listen. Touch the blade to the part and put your ear to the round end of the plastic handle. Far better, buy a mechanic's stethoscope. They usually cost less than $20, and are much more sensitive and safer to use. Keep well clear of the pulleys and belts when you do this.

- **A gravelly noise** from a component with bearings can indicate that the bearings are about to fail. The alternator and fresh-water recirculating pump are prime suspects when you hear this. A belt that's too tight could hasten either of these failures.
- **Change in tilt-lift motor noise** on an outboard could be a precursor to pump failure or air in the tilt motor fluid. It could also indicate drop in voltage that could indicate fault in the charging system, corroding connections, or wiring. Note: It's normal for most tilt motors to have two different levels of sounds as the function shifts from power trim adjustment to full tilt.
- **Variation in the engine noise**, called "hunting," could indicate impurities in the fuel, an air leak in the suction line, a clogging filter, a failing fuel pump, or a failing injector pump.
- **A "thunk" when you push the starting button** means problems, even if your engine then seems to start normally. The "thunk" could be caused by a hydraulic lock resulting from water standing on top of a piston. If you hear a lighter "clunk" in the starter, it may be a bad solenoid, engagement gear, or starter.
- **A squealing noise** could indicate a loose V-belt, but it could also be a clue that one of the components it is turning, such as the alternator or fresh-water recirculating pump, is freezing up. Bad bearings could be causing this in both components. Overload or deteriorating internal parts could cause this in the alternator.
- **Unusual cracking or creaking sounds** when hitting seas, running at speed, or otherwise stressing the hull could indicate delamination, structural bonds failing between bulkheads or supports, impending transom detachment, or other serious problems.
- **The bilge pump running more often** than usual means you should start looking for a leak. Some less obvious sources of water in the bilge include the propeller shaft seal, the freshwater system, the cooling system, the pop-off valve in the hot water heater, and the hoses on the engine.
- **Unusual noises in the transmission** usually signal a problem developing that could require professional help very soon.

Your Sense of Touch

Feeling Hot, Hot, Hot

Unusual vibration, whether in the boat or a component, is a sign of something amiss. It may be difficult to isolate, but you should try if it's safe to do so. Examples of potential problems: steering vibration may indicate something hung on the rudder or a system problem. Vibration in the hull over your shaft strut may indicate something caught on the prop or a bent prop. Vibration of the shaft may indicate the same or it could be a misalignment.

Feel for temperatures on all equipment regularly. A good time to do this may be during noise checks. Some parts you can touch with your hand, but if you don't know them, this could result in a serious burn. An infrared-temperature gun

with laser is invaluable. With it, you can accurately determine normal operating temperatures for different components and write down the values. Check these areas:

- **Heat exchanger** — The area where the engine water enters should normally be hotter than the other end where it exits.
- **Alternator** — It will be hotter putting out higher amps or if the belt is too loose.
- **Exhaust** — Abnormal temperatures at the point where raw cooling water enters your exhaust via the injection nipple can indicate a failing raw-water impeller, clogging heat exchanger, clogging injection nipple, debris in the raw-water strainer, engine laboring too hard, and other problems.
- **Rub some transmission fluid** between your fingers shortly after running (be careful, it may be hot) or when you're changing it. If you feel grit, there may be a problem. There's usually some grit in many transmissions, particularly new ones as they're being broken in, but this shouldn't be excessive.

Your Sense of Smell

Find The Stink Before You Sink

Your nose knows when something is amiss. Any changes in the way your boat smells — either when you open it up for the weekend or while running — could mean a problem is developing. Fuel fumes (either gasoline or diesel) must be dealt with right away. Often a leak is caused by vibration of a fuel line against another part of the engine. If this isn't corrected, it will worsen the breach. If a high-pressure fuel line is leaking, it may be spraying a fine mist of diesel into the air and this could cause a fire.

- **Burning rubber** may indicate a slipping belt that can overheat an alternator, or it could indicate freezing bearings in an alternator or water pump that will soon destroy the belt and the component.
- **Steamy water**, antifreeze, or overheating paint smells in the engine space indicate an overheating engine. Antifreeze smell may also indicate a breach in the engine's cooling system, ranging from a burst hose to a cracked head or block.
- **Hot lube oil** smell indicates an oil leak, probably requiring immediate shutdown.
- **A burnt oil smell** when you pull the dipstick signals a serious internal problem. Have the engine checked immediately.
- **Burning electric** insulation smells should never be ignored. It could mean that a terminal is overheating and about to arc and/or short out, or that there is too much of a load somewhere in your electrical system, or that an electrical component is suffering an internal meltdown. Its source must be located immediately. Try to turn off whatever wire or component is involved, preferably at the breaker. It may be a good idea to depower the entire boat, DC and AC, and then turn circuits back on, pausing with each one to see if that's the cause of the smell.
- **A change in bilge smell**, such as a new musty smell, could indicate leaking condensate from the air conditioning or refrigeration units. A leaking shower sump causes its own bad smell.

Seeing Is Believing

A Close Look Might Reveal Trouble Beneath The Surface

A periodic visual inspection of important components could prevent a bad surprise later, if you know what to look for. Areas of rust, or a small crack or scaling on a stainless-steel component, may be a sign of crevice corrosion, which could result in failure of the part.

- **Gelcoat cracks** may be of only cosmetic significance, but they could indicate serious flex from too much stress in the area, or delamination underneath.
- **Changing exhaust color** with no obvious cause may be a precursor to problems. Generally, black exhaust means fuel burning poorly; white or bluish smoke may indicate excessive oil burning; and steam can indicate overheating. But exhaust colors have many nuances. Diesels emitting black smoke could need a new air filter. Diesels billowing smoke might need new injectors. Gas engines might smoke on startup, but more than 10 seconds could indicate a problem

with the fuel mixture. Steam from either engine type could mean water getting past the head gasket (and will be accompanied by the smell of steamy water or antifreeze).

- **Frayed lines** may be evidence of age and too much exposure to UV, chafing, and poor fairleads. Figure out the cause and address it, and then replace the line.
- **Discoloration of metal parts** in contact with water could indicate corrosion or electrolysis. Unusual discoloration of heated metal parts can indicate excessive heating. Many metal parts (such as an exhaust manifold) subject to high heat will discolor to some extent, but watch for continued, more noticeable discoloration of these parts. Discolored paint can also indicate excessive heat. Bronze parts that have turned pink may indicate a stray current problem.
- **Discoloration of wire terminals** or insulation could be a sign of excessive heating or corrosion underneath the insulation.
- **A sheen on the water** at your exhaust when the engine is running can indicate poor burning of the fuel. Possible causes could include bad injectors, timing, plugs, or poor compression, as from valve or ring problems. Pull the spark plugs on your gas-powered engine. Beige or brown is the right color. Grey indicates detonation/timing issues. The sheen could also indicate lube oil entering the exhaust or transmission oil escaping into the exhaust through a leaking heat exchanger.

Outboard Motors

Using an outboard

If you're familiar with car engines, you'll know that they produce motion by burning gasoline with oxygen in metal cylinders. The cylinders have sliding pistons that push a crank around and the crank drives a shaft that (eventually) powers the wheels. Much the same happens in an outboard motor. The main difference is that there are usually fewer cylinders, operating in either a two-stage or four-stage cycle. Instead of driving a gearbox, the motor powers a propeller. To steer a boat with an outboard motor, you simply tilt the whole motor casing so the propeller pushes the water away from it at an angle. (Some outboards you can tilt by hand; others are steered by turning a steering wheel that tilts the motor using hydraulic cables.) You can go faster by opening up the throttle so the outboard burns more fuel and turns over more quickly.

How does an outboard motor work?

In Theory

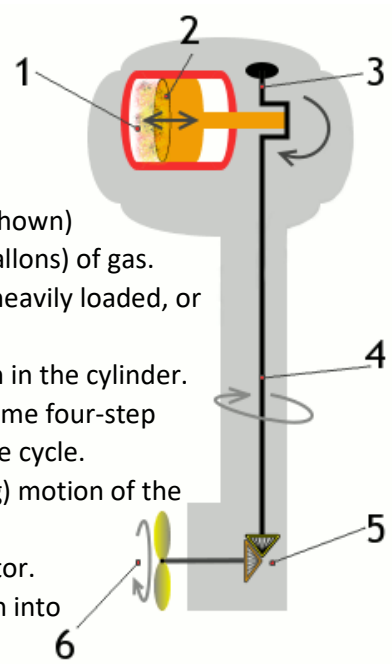

Open up an outboard and this—hugely simplified—is what you'll find inside:

1. Fuel burns in the cylinder (or cylinders) to make power. There's a fuel tank (not shown) inside the case of the motor at the top, big enough to hold perhaps 23 liters (6 gallons) of gas. The heavier your boat, the faster you drive it, the choppier the water, the more heavily loaded, or the lower in the water it sits, the more fuel you'll burn.
2. Powered by the burning and expanding fuel gases, a piston moves back and forth in the cylinder. This is just like the piston in a car-engine cylinder and often works through the same four-step process (four-stroke cycle), although some outboards do use a simpler two-stroke cycle.
3. The piston rod turns the crankshaft, converting the back-and-forth (reciprocating) motion of the piston into round-and-round (rotary) motion.
4. The crankshaft turns the main driveshaft running down the long spine of the motor.
5. A small gearbox at the bottom of the driveshaft converts vertical spinning motion into horizontal spinning motion.
6. The propeller powered by horizontally spinning gears powers the boat through the water.

In Practice

The very simplified illustration on Page 11 is designed to show you the basic operating principle of an outboard motor; real motors are somewhat more complex than this! Here's a very clear cutaway illustration prepared by Suzuki Motor Corporation for a patent application they were granted in 1999 for a new design (US Patent #5,980,341: Outboard Motor). It’s colored and greatly simplified the numbering so you can make sense of it more easily; if you want to know all the details, check out the patent, where you'll find more drawings of the same engine. Here a few of the parts that are worth noting:

1. Flywheel (blue): A heavy wheel that builds up momentum as the engine accelerates, helping to maintain a smooth and steady engine speed.
2. Starter motor (grey): Normally you'd start an outboard motor electrically, just as you'd start a car. If that's not possible, you can attach a pull cord to the flywheel and tug it vigorously to "crank" the motor into life. There's a special notch in the flywheel where you attach the cord. (Find out more about flywheels.)
3. Crankshaft (red): Collects power from the engine pistons, which fire slightly out of step to keep the motor running at a steady speed
4. Cylinders (blue): This motor has three cylinders arranged horizontally. A medium-sized, three-cylinder outboard like this produces something like 40–50 horsepower. It's a fairly hefty machine, weighing in at 86kg (190lb)—almost the exact average weight of an American adult male!
5. Pistons (yellow): Move back and forth in the cylinders, driven by the energy released from burning fuel, and transferring that energy to the crankshaft.
6. Carburetors (orange): Three separate carburetors combine fuel with air to make an explosive mixture—there's one for each cylinder.
7. Camshaft (green): Opens and closes cylinder valves that let fuel in and exhaust gas out.
8. Fuel pump: Sends fuel to the carburetors.
9. Sparking plugs (red): ignite the fuel in the cylinders.
10. Mounting bracket: Where the motor attaches to the back of the boat and swivels up and down.
11. Driveshaft: Carries power from the crankshaft down to the gears. Think of it as a kind of "spinning spine," running straight down through the center of the motor linking the cylinders at the top to the gears and propeller at the bottom.
12. Anti-ventilation/cavitation plate: Cavitation is what happens when a spinning propeller churns up air or engine exhaust gas in the water. Bubbles form and burst, which, over time, wear away the propeller's surface. The anti-cavitation plate is designed to reduce that problem, but cavitation can still be caused by floating debris disrupting the smooth flow of water around the propeller blades.
13. Gear unit: The gears (not shown) are inside here.
14. Propeller.

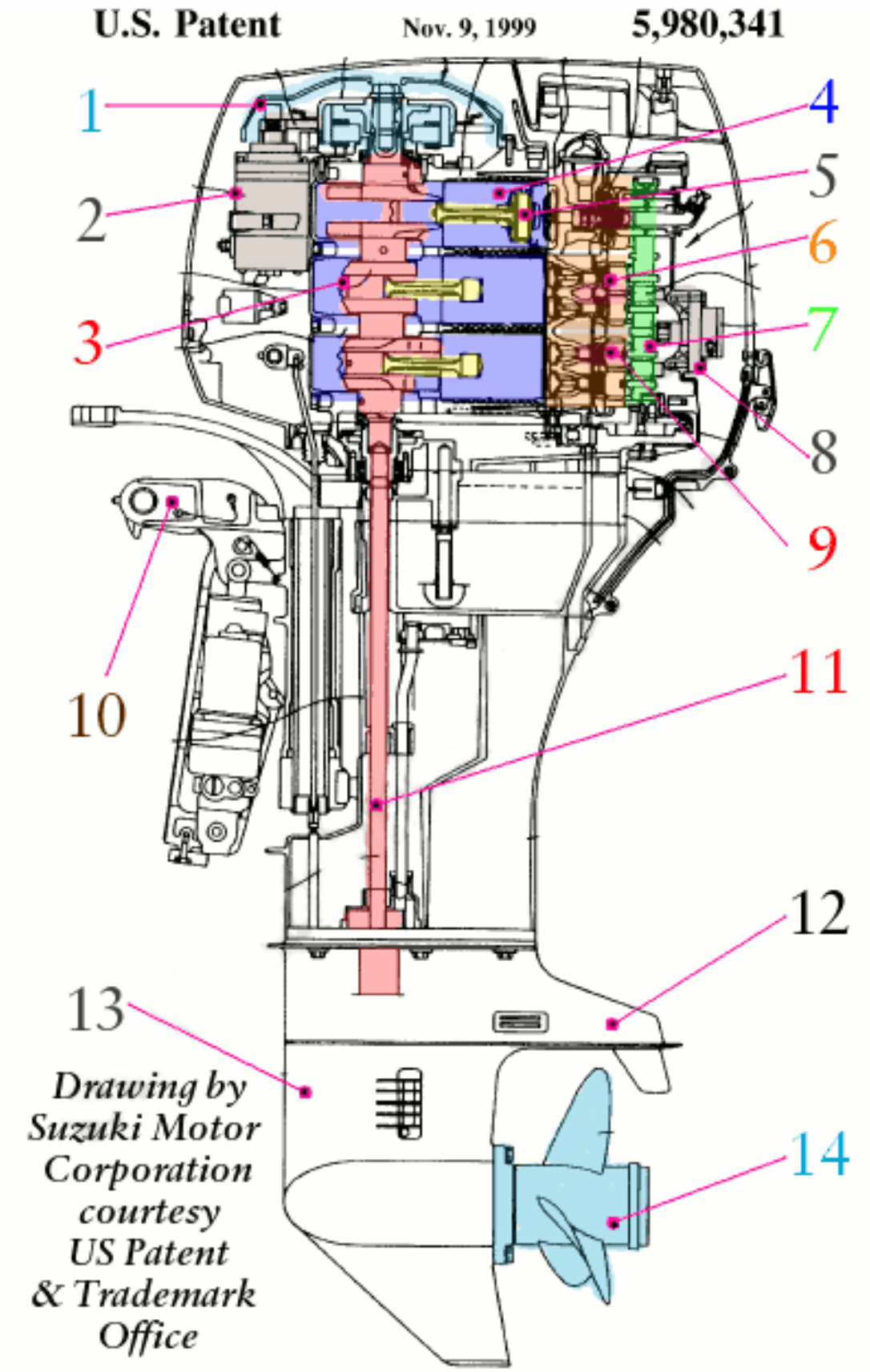
U.S. Patent
Nov. 9, 1999
5,980,341
1
2
3
4
5
6
7
8
9
10
11
12
13
14
Drawing by Suzuki Motor Corporation courtesy US Patent & Trademark Office

Outboard Motor Maintenance

Routine Maintenance

Routine maintenance can prevent dockside or underway situations that could put your boat in harm's way and avoid dangerous — or embarrassing — circumstances for you, your passengers, and your boat. The good news is that with proper care and regular maintenance, modern outboard engines require minimal service, other than routine efforts and minor adjustments. A boat owner can handle most of the routine maintenance for outboard, inboard-outboard, or stern drive vessels without an in-depth knowledge of engines and with inexpensive tools and supplies.

Boat owners should thoroughly review the owner's manual for the engine at least yearly and closely follow instructions for routine and annual maintenance. Doing so will ensure that the engine works as it should and that warranty protections are not jeopardized by faulty or incorrect practices. Prudent boat renters will ask the boat owner about the engine maintenance record and ask if a log is available (see below) before renting or chartering a vessel.

Every boating season should start with a tune-up by a professional engine mechanic, either at a dealer or an independent shop. The mechanic should test the spark plugs and warning alarms, run a compression test, perform a lower unit pressure test, check watertight seals and water pump, and inspect the overall condition of the motor.

After every outing during the season, flushing the engine is of paramount importance, regardless of whether boating in salt or fresh water. The flushing is even more critical if, while underway, you ran aground or kicked up sand or marine growth. The cardinal rule for flushing is to never run an engine without supplying water to the lower unit. Just seconds of dry running can damage the water pump and other parts.

Maintenance Tips Before You Boat

Slip "ear muffs," (two flexible rubber seals connected by a clamp) onto the lower unit where the water is picked up and attach a garden hose. Start the engine and let the water pump do the rest. Ear muffs are widely available at marine retailers.

During the flush, check the water pump to ensure adequate flow by placing a finger through the water stream. It may be warm, but it should not be hot. If the output is hot or weak, debris may be stuck in the outflow tube. Immediately shut off the engine and insert a small piece of wire or similar object into the flow tube and work back and forth. Start the engine again and check the output.

After flushing the engine, disconnect the fuel line and allow the engine to totally burn remaining fuel. After the fuel is expended, turn off the ignition. Open the engine cover and check for fuel/water leaks. Any leaks should be immediately repaired. Wipe and lubricate all moving parts, such as the shift and throttle cables, carburetor valves, etc.

After completing post-voyage cleaning/flushing, replace the engine cowling. It is good practice to protect the engine with canvas or plastic when stored.

Routine maintenance should include a check of fuel system components, including lines, primer bulb, clamps, tanks, vents, and apertures for leaks.

On-Board Maintenance Kit

See Page 16 for Cheyenne's Suggestions

An on-board kit with basic tools (screwdrivers, hammer, vise-grips, pliers, etc.) and the equipment listed below provides a boater with the ability to perform routine post-voyage maintenance and affords a chance to get back underway if mechanical, electrical, or other problems occur while on the water.

Spark plugs and spark-plug wrench
Socket and wrench set (metric and standard)
Oils and lubricants specific to the engine
Oil filter wrench (if needed)
Extra oil and fuel filters
Fuel stabilizer
Funnel, bucket, oil-absorbent mats, towels, and an oil-disposal container
Flexible garden hose with standard fittings
Battery terminal cleaner
Electrical system multi-meter (analog or digital)
Hand cleaner
Extra rubber hose and clamps, sized to existing on board hoses/clamps
Teflon tape, leak sealer compounds, duct tape, and emery cloth
Propeller shear/cotter pins

Maintenance Checklist and Maintenance Log

Developing a step-by-step, post-voyage checklist will ensure that you have covered each phase of the cleaning and flushing process every time your engine comes out of the water. Consult the owner's manual when developing the list to make certain all measures are taken and that efforts do not cause inadvertent damage. Many boaters create a one-page list, covered in plastic and kept on the boat, to be readily available at the end of a voyage.

For centuries, mariners have maintained shipboard logs to record events vital to a ship's operation. Recreational boat owners would do well to follow this custom for engine maintenance, but, of course, on a smaller scale. The few minutes it takes to regularly record maintenance performed and other information serves as a memory jogger for future maintenance needs, saves time and money during annual tune-ups, and provides helpful data. Keeping a maintenance log demonstrates that you are a conscientious boater and the fact that one is available will make your boat much more marketable to renters.

Annual Motor Maintenance

Even boaters who have worked on boat engines for years often rely on certified, professional mechanics to perform required annual maintenance. Entrusting motor maintenance to qualified mechanics with high-tech diagnostic tools and in-depth familiarity with the make and model of your engine helps to create some peace of mind when on the water.

If the boat engine is under warranty, using your boat dealer's service department for annual maintenance is the best approach.

OUTBOARD MOTOR CARE

Regular maintenance will keep your motor running well for years to come. The following are general guidelines. Be sure to check your owner's manual for manufacturer's recommendations/procedures particular to your boat.

AFTER EVERY TRIP

- ❒ Flush out engine
  (applies to both fresh and salt water boating)
  - ❒ Slip "rabbit ears," *(two flexible rubber seals connected with a clamp)*, onto water intake and attach a garden hose
  - ❒ Start engine and let water pump do the rest
- ❒ While flushing motor, check water pump flow
  - ❒ Feel water stream with your finger; it may be warm but should not be hot
  - ❒ If output is weak, shut down engine to prevent overheating/damage
  - ❒ Check outflow tube for debris; insert wire and work it back and forth
  - ❒ Restart engine/recheck output; if still weak, water pump may need to be replaced
- ❒ After flushing, disconnect fuel line and allow engine to burn all the fuel in the carburetor
- ❒ Turn off key and battery switch *(if you have one)*
- ❒ Remove engine cowling; check for fuel or water leaks *(Consult mechanic if you find any leaks)*
- ❒ Wipe motor down and spray with an anti-corrosive like WD-40 or Quick-Lube
- ❒ Replace cowling and wipe down. Cover motor with a canvas or plastic cover
- ❒ Always use fresh fuel; End-of-season maintenance should include draining your tanks and proper disposal of fuel

REGULAR MAINTENANCE

- ❒ Check fuel line for cracks and worn spots periodically
- ❒ Inspect fuel primer bulb for cracks; make sure it is pliable
- ❒ Ensure fuel line fittings seat properly and don't leak
- ❒ Inspect clamps on the fuel line for rust or corrosion
- ❒ Check the tank vent to make sure it aspirates properly
- ❒ Regularly check for water in the fuel

Content courtesy of ***BoatSafe.com***

Resources & Materials

- *Boatowner's Mechanical and Electrical Manual* by Nigel Calders
    - Cheyenne's comments – "I never go to sea without it. I suck at engines and electrical is basically magic to me. I troubleshoot and have solved many problems with that book."

Cheyenne's Suggestions: a tool that fits the fittings and fasteners on the boat. Keep the tools grouped by what they go to. For instance, if there are bolts on the steering gear, get the correct wrenches needed to tighten or loosen those, put them together, and label steering gear. Go through the mechanical systems on the boat and make a kit for each one. Then in a bad situation you are not fumbling through a tool box looking for the perfect size wrench to fix the steering.

Know how to access and change things like filters, impellers, and cables so if they need to be replaced it's a simple task instead of a disabling emergency. These are things that are common issues but are fairly simple and straight forward.

Cheyenne says, "I never seem to have the right stuff but I carry:

- Box wrenches in both standard and metric.
- Flat head screw driver big and small
- Phillips head couple of sizes (I actually carry the type that has like 10 different driver heads in the handle, found it the most convent and easy way to carry what I need)
- Allen wrench set
- Pipe wrench of appropriate size for boat
- Adjustable wrench (at least two)
- Hammer or maul
- WD40 or PB blaster
- Nut drivers are nice to have around if you have to deal with hose clamps
- Duct tape
- Electrical tape
- Teflon tape
- Electrical connectors (depending on your boat)
- Multimeter
- Flashlight and/or headlamp
- Nigel Calder book so I know how to fix whatever I need these tools for (not joking)

For engine kit (spare parts to have on hand):

- Fuel filters (make sure they are the correct ones)
- Oil filters (make sure they are the correct ones)
- Spare Impeller!!!
- Steering cable
- Throttle cable
- Extra oil
- Extra steering fluid (if your boat uses it)
- Extra transmission fluid
- Extra coolant (Basically, I like to be able to top off fluids if the engine is burning it or starts leaking.)
- Hose clamps
- On long trips I also like extra hose